Today
- Review Lab Comparator / 555 Circuit
- Review Schmitt-trigger
- Oscillators { Square Waves → Midterm #2 up to here
  Sine Waves

Midterm: Q1: Short Answers
↳ <25 words

Q2, Q3, Q4 } Circuits V_A, V_o

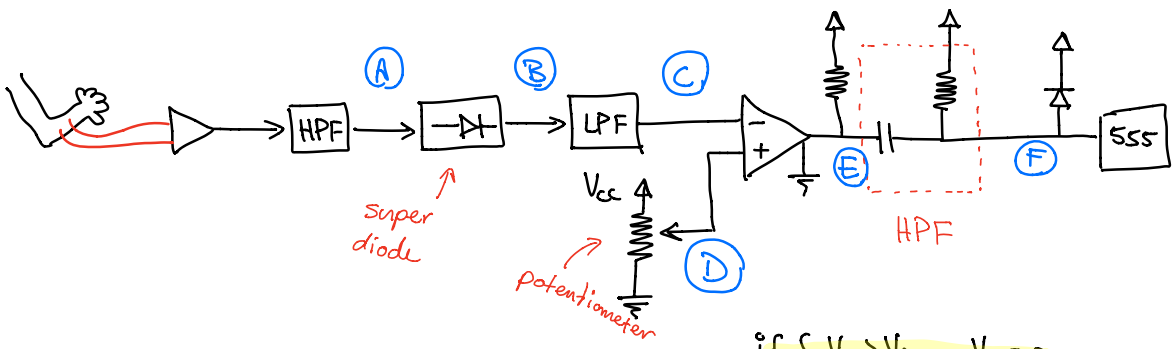

if { $V_C > V_D$, $V_E = 0$
$V_C < V_D$, $V_E = V_{cc}$

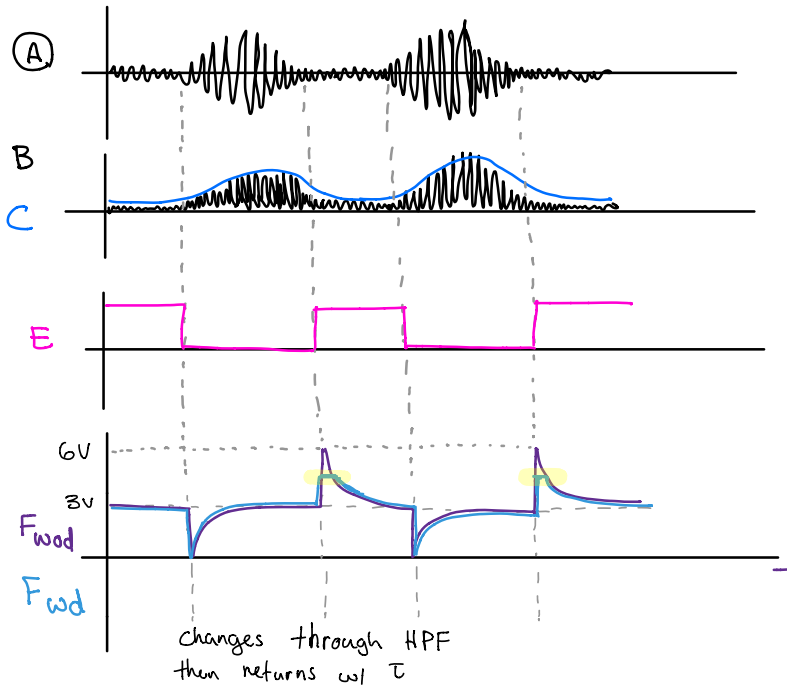

F_{wod} = F w/o diode

F_{wd} = F w/ diode

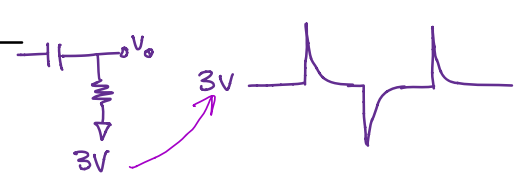

* Diode Conducts if $V_F > 0.7 + 3 = 3.7V$

Neg spikes need b/c 555 chip is negative-edge triggered!

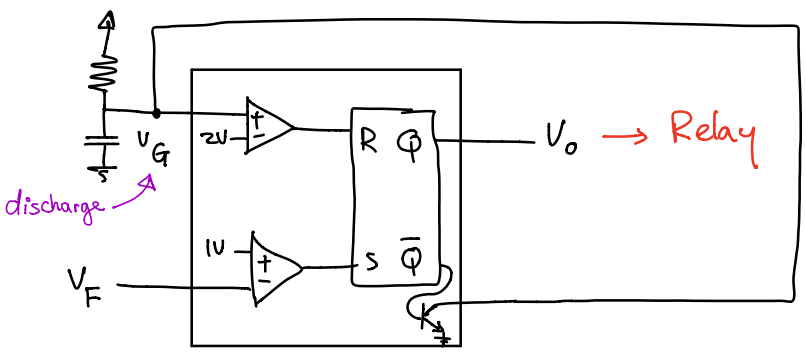

SR	$Q\bar{Q}$
10	10
01	01
00	remember

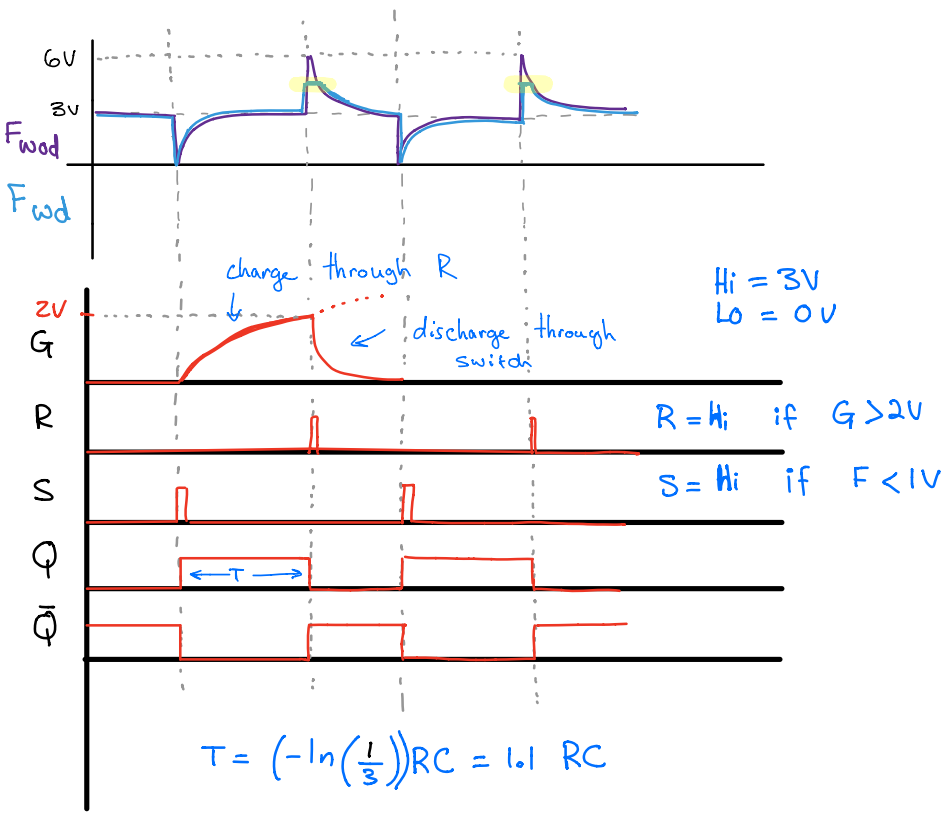

$$T = \left(-\ln\left(\frac{1}{3}\right)\right)RC = 1.1\ RC$$

* Photo of the board on the next page!

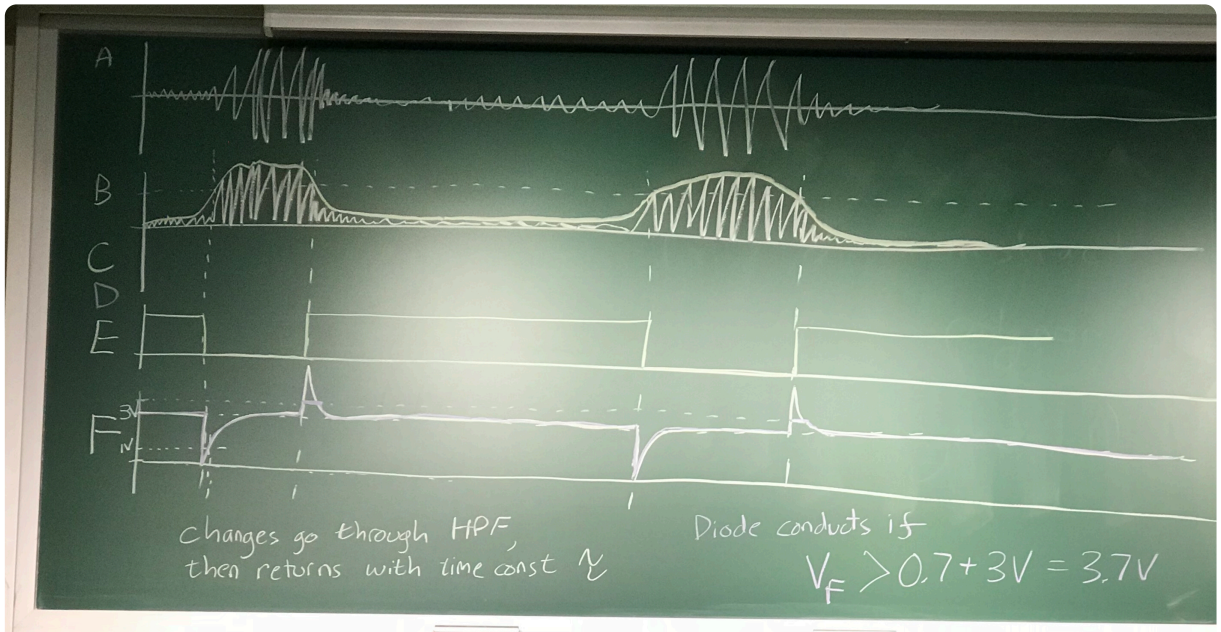
A
B
C
D
E
F
3V
1V
Changes go through HPF,
then returns with time const τ
Diode conducts if
$V_F > 0.7 + 3V = 3.7V$

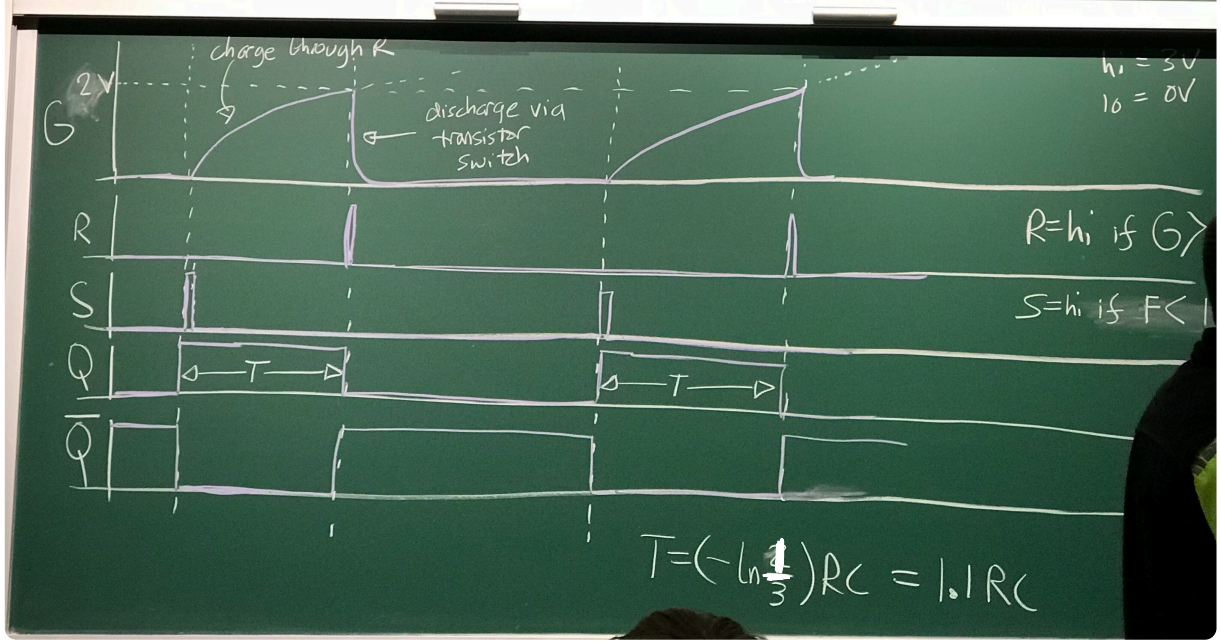
charge through R
2V
G
discharge via
transistor
switch
$h_i = 3V$
$l_o = 0V$
R
R=hi if G>
S
S=hi if F<
Q
T
T
$\overline{Q}$
$T = (-\ln\frac{1}{3})RC = 1.1RC$

Lab: Schmidt Trigger

Look @ figures in prelab 4A.

Ex. slope $\approx \frac{5V}{10ms} = \frac{500V}{s}$

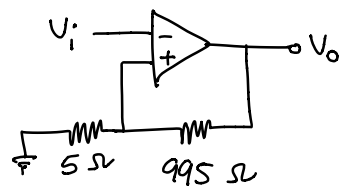

if $\begin{cases} V_i < V_+ & V_o = +10V \\ V_i > V_+ & V_o = -10V \end{cases}$

This was covered in prev. lecture

$$V_+ = \frac{5}{5+995} V_o = 0.005\, V_o$$

if $\begin{cases} V_o = 10V & V_+ = 0.05V \\ V_o = -10 & V_- = -0.05V \end{cases}$

new:

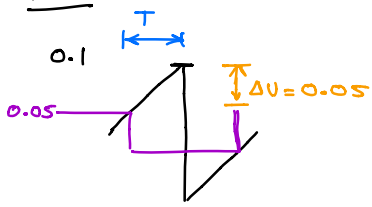

$$\frac{\Delta V}{\Delta T} = \text{slope} \rightarrow \Delta T = \frac{0.05V}{500 \frac{V}{s}} = 10^{-4} s = 100\,\mu s$$

Square wave Oscillators

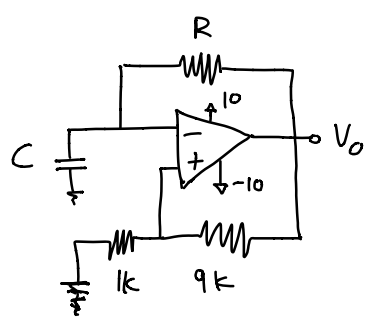

Assume initial $V_- = 0$, $V_o = 10V$

$$V_+ = \left(\frac{1}{1+9}\right) 10V = 1V$$

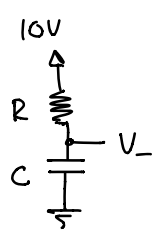

if $\begin{cases} V_+ > V_- & V_o = 10V \\ V_+ < V_- & V_o = -10V \end{cases}$

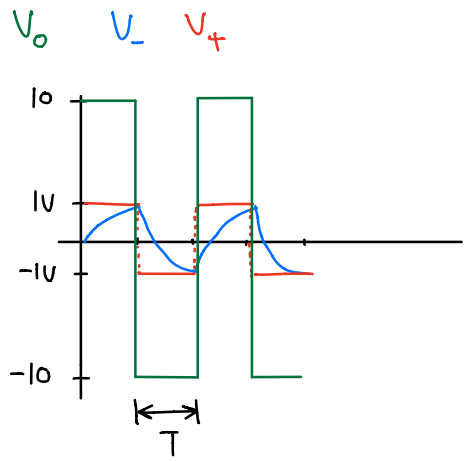

Calculate T

$$V_\infty - V_f = (V_\infty - V_i)\, e^{-t/\tau}$$

$$-10-(-1) = [-10-(1)]\, e^{-t/\tau}$$

$$\frac{-9}{-11} = e^{-t/\tau}$$

! $T = -\tau \ln \frac{9}{11} = 0.2\tau$ } Half-period

$T_{full} = 2T = 0.4\tau$

! $f = \frac{1}{\text{period}} = \frac{1}{2(1.7\tau)}$

Another Implementation (using 555)

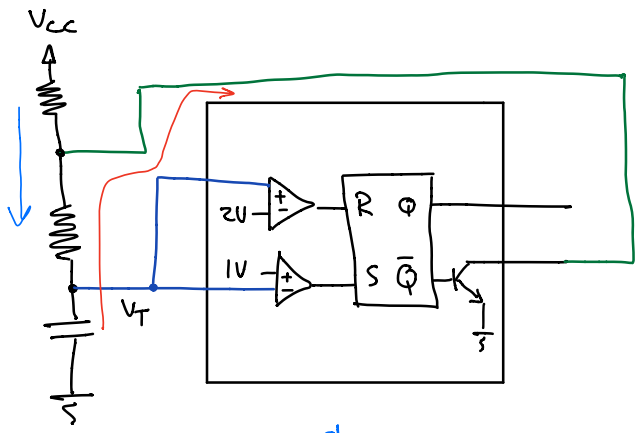

— = charge

— = discharge

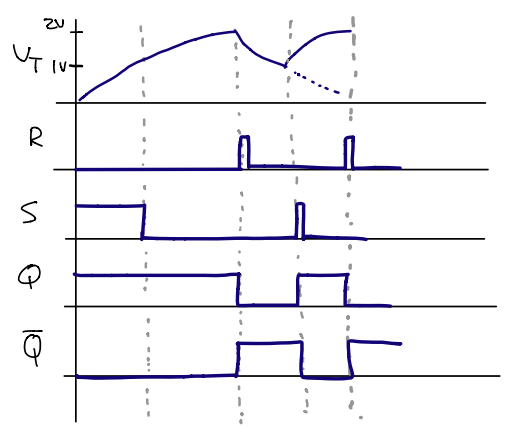

Charging

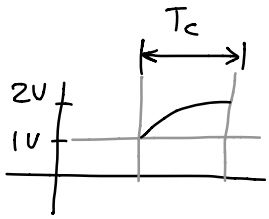

$$V_\infty - V_F = (V_\infty - V_i)e^{-t/\tau}$$

$$T = -\tau \ln\left(\frac{V_\infty - V_F}{V_\infty - V_i}\right) = \tau\left(-\ln\frac{1}{2}\right) = (0.69)\tau$$

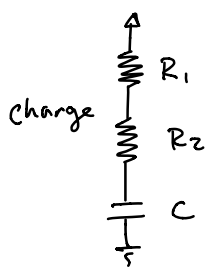

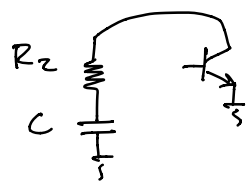

$$\tau_c = (R_1 + R_2)C \qquad \tau_D = R_2 C$$