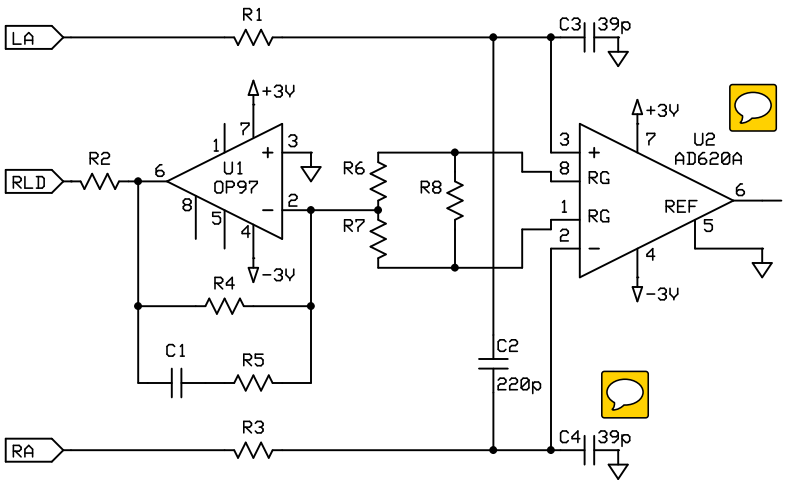
LA
R1
C3
39p
+3V
U1
OP97
RLD
R2
R6
R8
R7
U2
AD620A
RG
RG
REF
-3V
R4
C1
R5
C2
220p
RA
R3
C4
39p

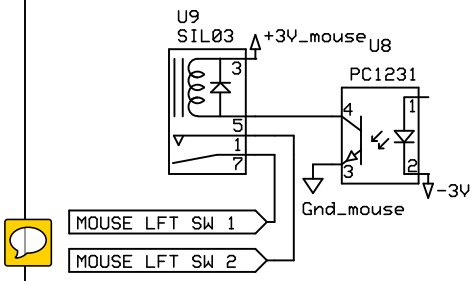
U9
SIL03
+3V_mouse
U8
PC1231
-3V
Gnd_mouse
MOUSE LFT SW 1
MOUSE LFT SW 2